STATMEDICAL
"we take care"

Oasis Recliner

Parts and Service Manual

Oasis Recliner 24"

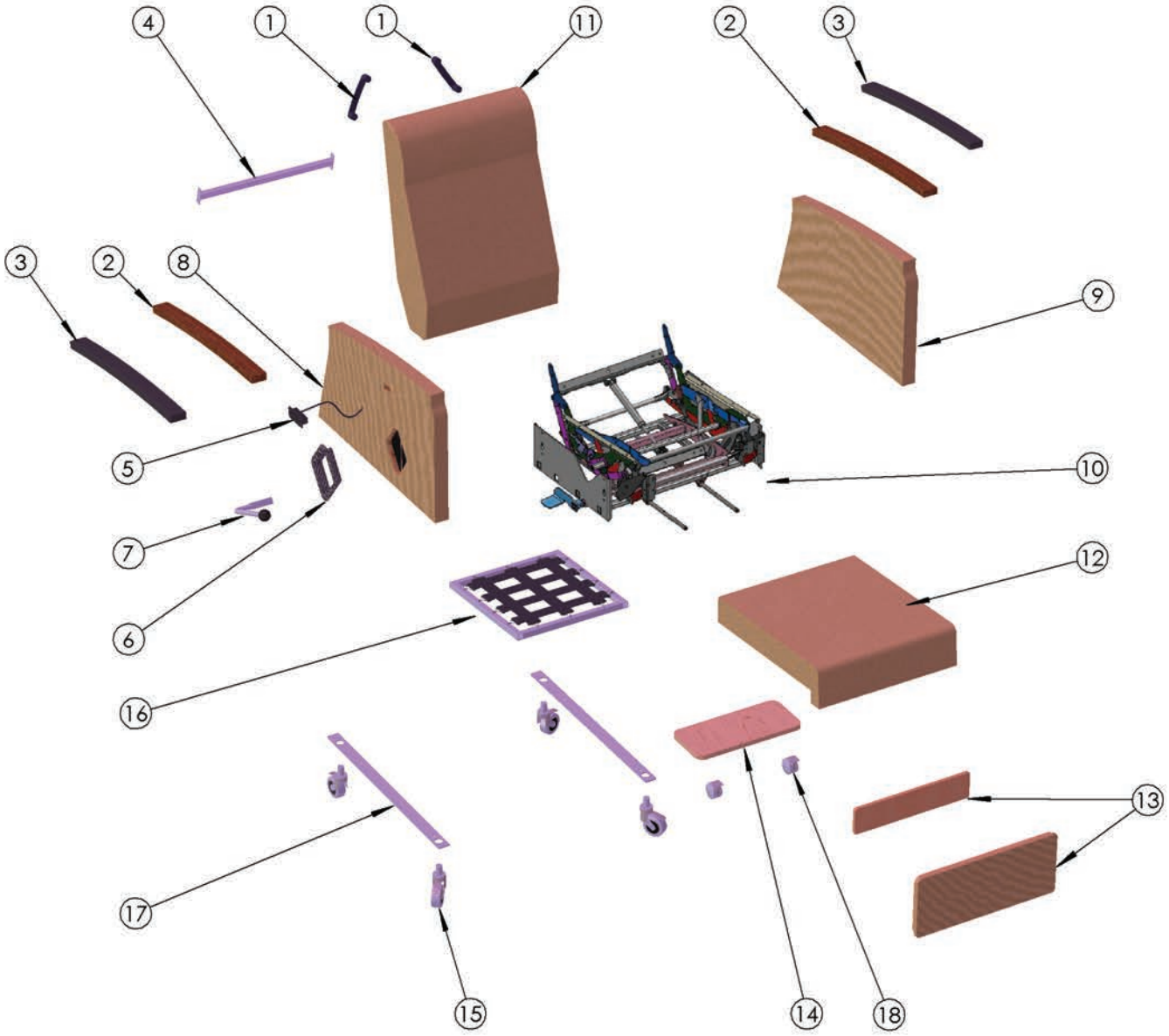

ITEM	PART NO.	DESCRIPTION	QTY.	ITEM	PART NO.	DESCRIPTION	QTY
1	SREC402	PUSH HANDLE	2	10	SREC303	MECHANISM, 24"	1
2	SREC107	ARMCAP, EUROPEAN BEECH (OPTIONAL)	2	11	SREC432REP	CHAIR BACK ASSY., UPHOLSTERED*	1
3	SREC210	ARMCAP, POLY (OPTIONAL)	2	12	SREC433REP	SEAT CUSHION, UPHOLSTERED*	1
4	SREC309	REAR SUPPORT BAR	1	13	SREC434REP	LEG RESTS, LARGE & SMALL, UPHOLSTERED*	1
5	SREC405	CABLE RELEASE	1	14	SREC101	FOOT REST (OPTIONAL)	1
6	SREC408	TRIM, LEVER OPENING	1	15	5377 PJP 100 R05-32	CASTER, INDIVIDUAL, LOCKING	4
7	SREC311	LEVER ASSEMBLY	1	16	-	SEAT FRAME W/WEBBING (SEE NEXT PAGE)	1
8	SREC430REP	END FRAME, RIGHT, UPHOLSTERED*	1	17	SREC326	CASTER BRACE	2
9	SREC431REP	END FRAME, LEFT, UPHOLSTERED*	1	18	5920 UJI 065 L51-20 DOM 20	FOOTREST CASTER (OPTIONAL)	2
*** UPHOLSTERY CODE MUST BE SPECIFIED**							

© Copyright Stat Medical Inc.

Oasis Recliner Seat Frame and Webbing

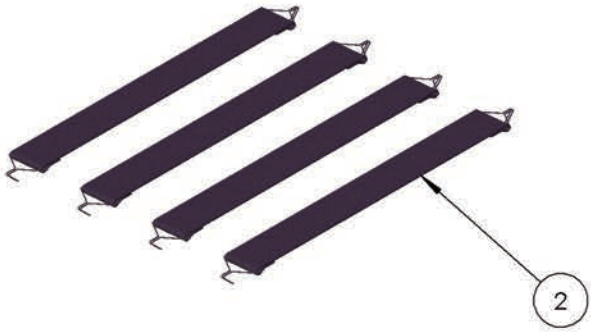

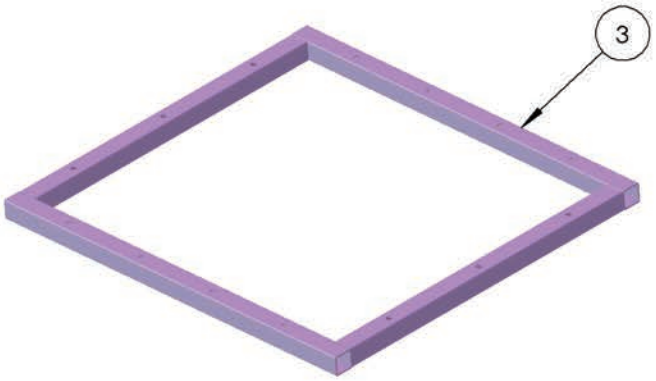

ITEM	PART NO.	DESCRIPTION	QTY.
1	20301NC202100	WEBBING, 19.5"	3
2	20301NC201900	WEBBING, 18"	4
3	SREC 307	SEAT FRAME, 24"	1

© Copyright Stat Medical Inc.

Optional Central Caster Locking System For Oasis Recliner

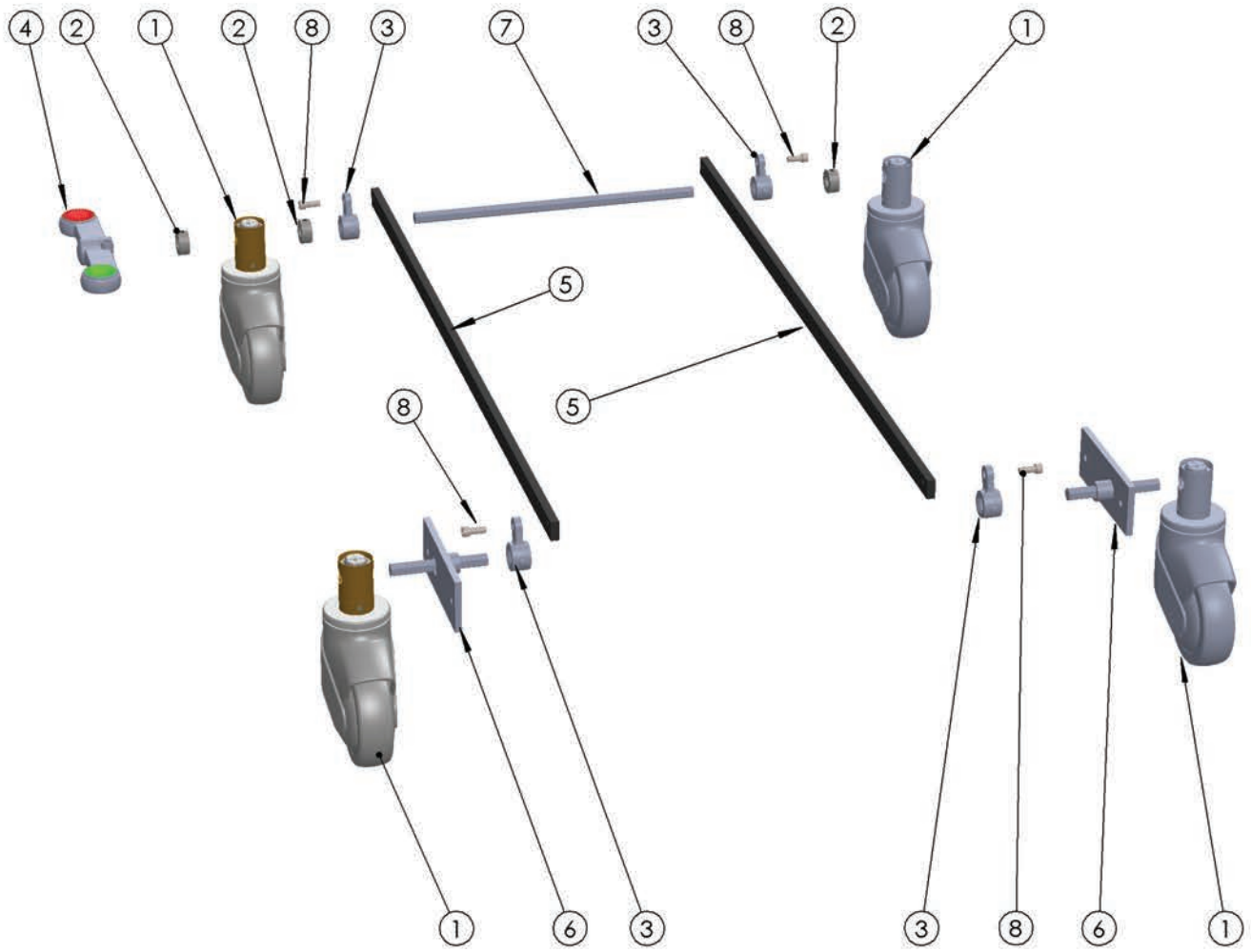

ITEM NO.	PART NUMBER	DESCRIPTION	QTY.
1	5444-46PJP100R36-32	LOCKING SWIVEL CASTER	4
2	XSST0091	1/2" BORE COLLAR, OD 1 INCH	3
3	4941	CONNECTING LEVER 28MM	4
4	35425/31859/318603	PEDAL	1
5	SREC313	LINKAGE, RECLINER CENTRAL LOCKING MECHANISM	2
6	SREC314	CASTER ACTUATOR ASSEMBLY	2
7	SREC315	HEX ROD, 24" RECLINER	1
8	SSP 0310312	SHOULDER BOLT	4

© Copyright Stat Medical Inc.

How to replace the optional Central Locking Casters

To replace the four casters we recommend placing the sides of the recliner on wood blocks so that the recliner is about 10" off the loor. This should be done with one or two helpers.

To Remove the Casters:

1) Rear Casters

a. Loosen the two set screws in the Connecting Levers (item 3) using a 3mm Allen key and a 3/64" Allen key the two set screws in the collars (item 2).
b. Remove the locking pedal from the hexagon shaft using a 5/32" Allen key.
c. Slide the shaft out of the recliner.
d. Remove the rear casters by pulling them downward out of the side frames.

2) Front Casters

a. Loosen the two set screws in the Connecting Levers (item 3) using a 4mm Allen Key, and remove the Levers from the hexagon shafts from the caster actuator assembly.
b. Remove the two machine screws from each Caster Actuating Assembly (item 6) using a #3 Robertson screwdriver.
c. Remove the Caster Actuator Assemblies.
d. Remove the front casters by pulling them downward out of the side frame.

To Install new Casters:

Very Important: these next steps must be followed in order for the casters to lock/ unlock properly.

1) Before Installing the Casters

Taking each caster in turn, insert one of hexagon shafts through the hexagon receptacle in the top of the caster stem and rotate it counterclockwise with a 7/16" wrench so that the caster is now in the locked position. If this puts the caster in the unlock position instead, remove the hexagon shaft, rotate the caster stem 180 degrees and reinsert the shaft. Rotating the shaft counterclockwise should now lock the caster. It is important at this point to note the orientation of the caster as well: once all four casters have been locked in the prescribed manner they need to all facing the same way. (See Fig. 1).

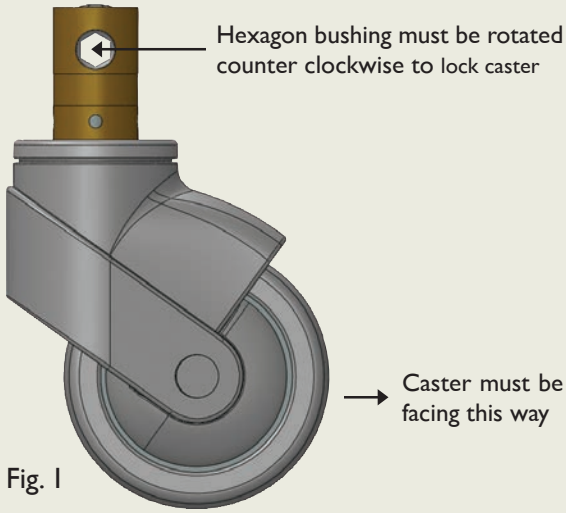

Fig. 1

2) Rear Casters

a. Maintaining the same orientation as noted in Fig. 1, install the rear casters.
b. Slide the hexagon shaft through the right side frame and caster stem until it emerges through the inside of the frame.
c. Slide one of the collars (item 2) on the shaft.
d. Next slide the right side Connecting Lever (item 3) onto

© Copyright Stat Medical Inc.

the hexagon shaft so that is also in the 1 o'clock position (when looking at it).

e. Now slide the shaft over to the left side of the recliner and install the left side Connecting Lever in 11 o'clock position (when looking at it) on the shaft. Slide the second collar onto the shaft.

f. Next slide the hexagon shaft into the left side frame and through the left rear caster stem.

g. Orienting the pedal so that it is in the approximate locking position when looking at it, (the green side of the pedal is in the 8 o'clock position and the red side is in the 2 o'clock position), slide it onto the shaft and secure it tightly. You may have to move the hexagon shaft back and forth a bit to be sure that it is properly inserted into the pedal. Now slide the pedal and shaft over so that it is touching the side of the recliner.

h. In a similar way slide the collars over so they are both touching the inside of the side frames and tighten the set screws in them. Do not tighten the set screws in the Connecter Levers at this point.

3) Front Casters

a. Maintaining the same orientation as noted in Fig. 1, install the front casters.

b. Install the left and right Caster Actuating Assemblies.

c. Install the two front Connecting levers onto the Caster Actuating Assemblies (they should only be able to go one way).

Fig. 2 Front left caster Connecting Lever in the Locked position

4) Final Steps

a. Next secure the four Connecting Levers adjacent to each casters. It is important that these are positioned on the rear hexagon shaft so that the Linkages (item 5) are parallel to the side frames. Tighten the set screws securely.

b. As a final step, recline and retract the recliner fully ensuring that there is no interference between the recliner mechanism and the Linkages.

Any questions can be emailed to our service department at **info@statmedicalcanada.com** or by phoning 866.783.4076

© Copyright Stat Medical Inc.

1710 Bishop St. N, Cambridge, ON N1T1T2 tel: 866.783.4076 info@statmedicalcanada.com

Accessory Mounting Location - Recliner Left Side

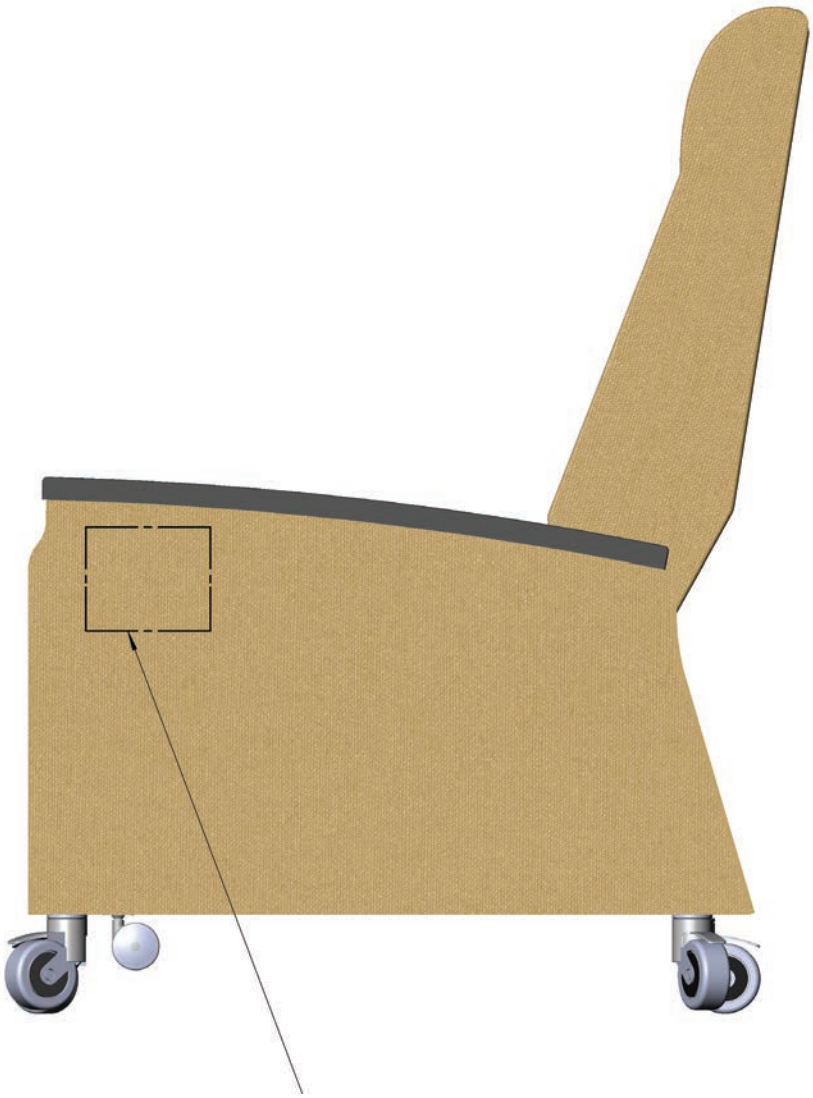

A wood plate located on the left side of the recliner is provided for field-mounted accessories, wood screws up to 2" long may be used to secure the accessory

© Copyright Stat Medical Inc.
1710 Bishop St. N, Cambridge, ON N1T1T2 tel: 866.783.4076 info@statmedicalcanada.com